FLOORPLAN
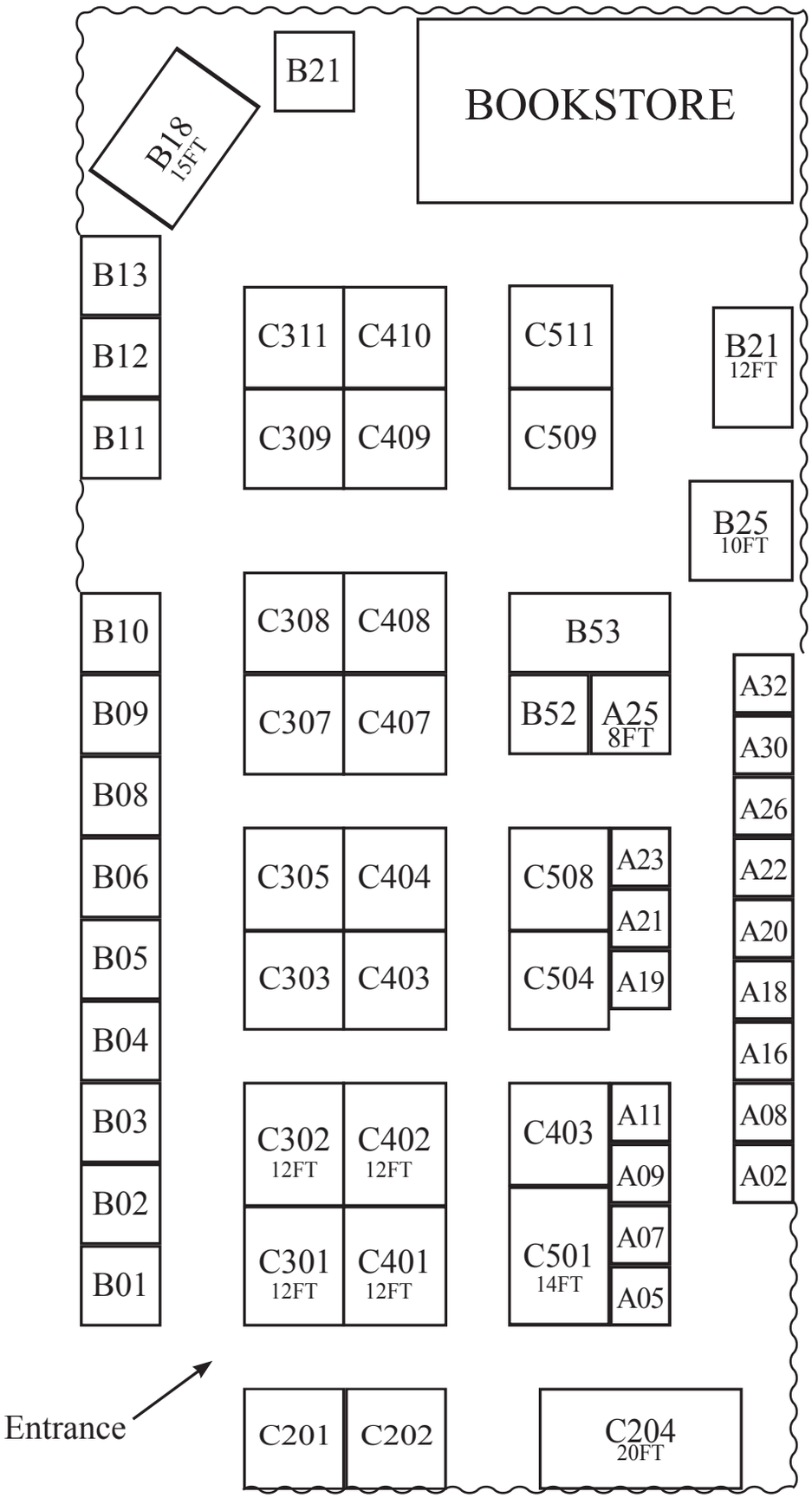
Mind Body Spirit Expo